C.I.P.	6,35 Browning Country of Origin: BE	TAB.	IV
		Date	84-06-14
		Revision	00-06-07

Alternative Names: 25 Auto(matic), 25 ACP

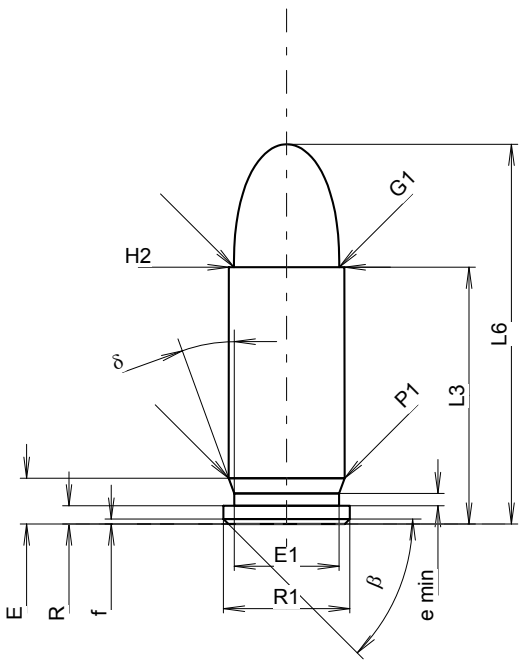

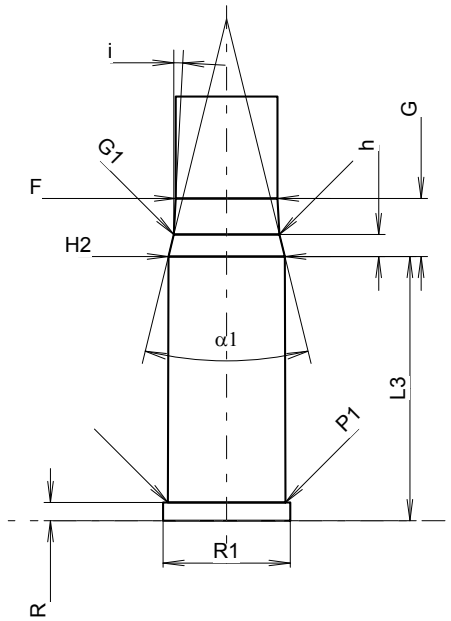

Scale 2.18:1

CARTRIDGE MAXI

Lengths

L1	=		
L2	=		
L3 1)	=	15.55	
L4	=		
L5	=		
L6	=	23.00	

Case Head

R 1)	=	1.10	-0.25
R1	=	7.65	
R3	=		
E	=	2.77	
E1	=	6.35	
e min	=	0.75	
δ	=	20°	
f	=	0.30	
β	=	45°	

Powder Chamber

P1	=	7.02
P2	=	

Junction Cone

α	=	
S	=	
r1 min	=	
r2	=	

Collar

H1	=	
H2 1)	=	7.00

Projectile

G1 1)	=	6.38
G2	=	
F	=	
L3+G 1)	=	19.07

Pressures (Energies)
Method Transducer

Pmax	=	1200	bar
PK	=	1380	bar
PE	=	1560	bar
M	=	9.00	

Miscellaneous Dimensions

Fe 1)4)	=	0.30
delta L	=	

CHAMBER MINI

Lengths

L1	=	
L2	=	
L3 1)	=	16.00

Breech

R 1)	=	1.10
R1	=	7.70
R2	=	
R3	=	
r	=	

Powder Chamber

E	=	
P1 1)	=	7.12
P2	=	

Junction Cone

α	=	
S	=	
r1 max	=	
r2	=	

Collar

H1	=	
H2 1)	=	7.05

Commencement of Rifling

G1 1)*	=	6.40	
G 1)*	=	3.52	
α1	=	27°30'	
h *	=	1.33	
s	=		
i 1)	=	3°00'20"	
w	=		

Barrel

F 1)*	=	6.17	
Z 1)	=	6.35	

Grooves

b	=	2.25	
N	=	6	
u	=	254.00	
Q	=	31.14	mm²

Dimensions in << mm >>
Dimensions and Tolerances for Proof Barrels
see Appendix CR 1.

Notes:
1) Check for safety reasons
4) Headspace on Rim
* Basic dimensions